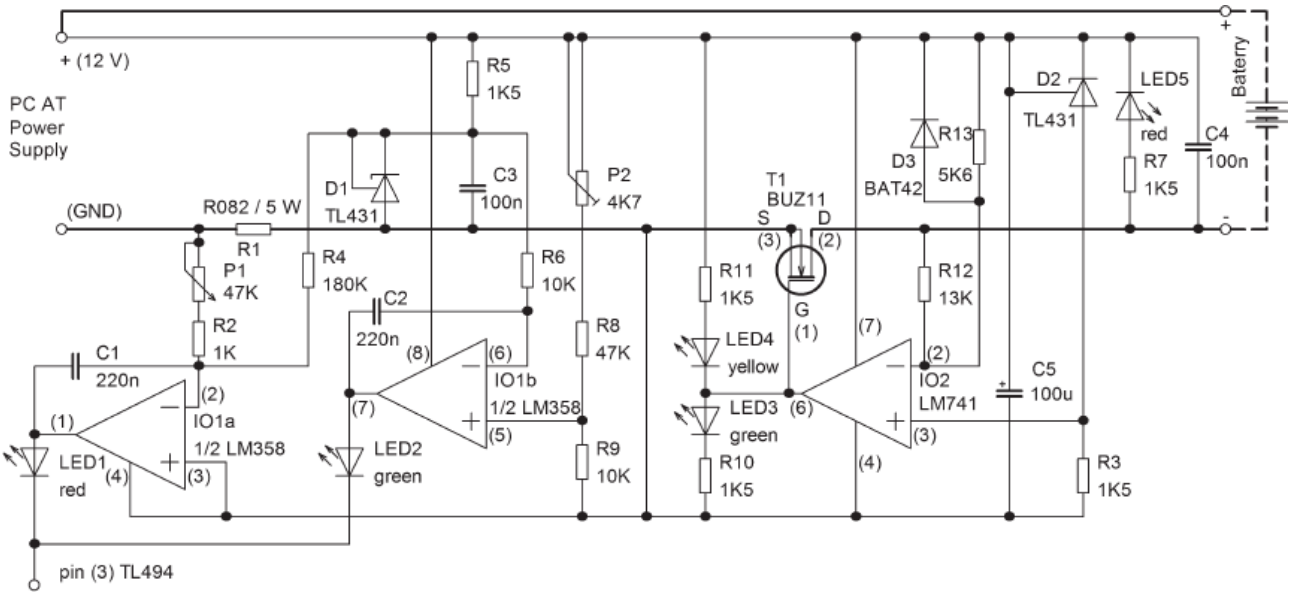
+ (12 V)
PC AT
Power
Supply
(GND)
R082 / 5 W
R1
P1
47K
R2
1K
C1
220n
IO1a
1/2 LM358
LED1
red
pin (3) TL494
R4
180K
D1
TL431
R5
1K5
C3
100n
C2
220n
IO1b
1/2 LM358
LED2
green
R6
10K
P2
4K7
R8
47K
R9
10K
T1
BUZ11
S
D
G
R11
1K5
LED4
yellow
LED3
green
R10
1K5
R12
13K
IO2
LM741
D3
BAT42
R13
5K6
D2
TL431
C5
100u
LED5
red
R7
1K5
C4
100n
R3
1K5
Baterry

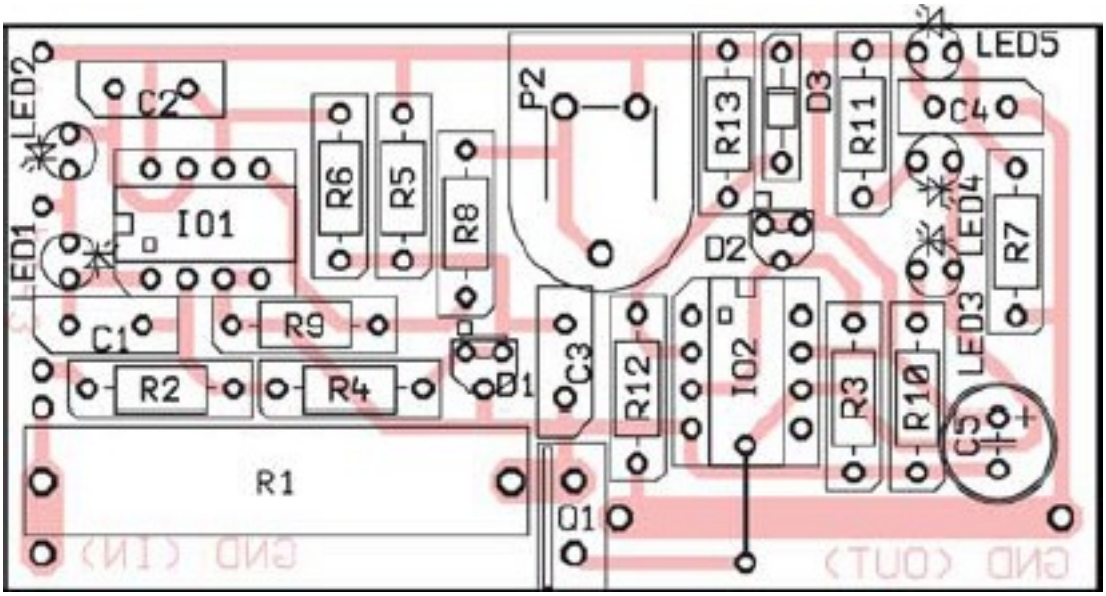
LED2
C2
LED1
IO1
R6
R5
R8
P2
R13
D3
R11
C4
LED5
D2
LED4
R7
C1
R9
C3
R12
IO2
R3
R10
LED3
C5
R2
R4
D1
R1
Q1